Baumer
Passion for Sensors

Incremental encoders/optoPulse

EIL580-SY

Solid shaft with synchro flange

100…5000 pulses per revolution

Overview

- Size ø58 mm
- Precise optical sensing
- Output signal level TTL or HTL
- Synchro flange
- Connection axial, radial or tangential
- Pulses per revolution up to 5000
- High protection up to IP 67
- High resistance to shock and vibrations

Technical data

Technical data - electrical ratings	
Voltage supply	5 VDC ±5 % 8...30 VDC 4.75...30 VDC
Reverse polarity protection	Yes
Short-circuit proof	Yes (HTL) Yes (TTL, max. 1 s and 1 signal)
Consumption w/o load	≤70 mA
Pulses per revolution	100 … 5000
Phase shift	90 ° ±10°
Duty cycle	40…60 %
Reference signal	Zero pulse, width 90° ±10 %
Sensing method	Optical
Output frequency	≤300 kHz (TTL) ≤160 kHz (HTL)
Output signals	A+, B+, R+, A-, B-, R-
Output stages	TTL/RS422 HTL/push-pull
Interference immunity	EN 61000-6-2
Emitted interference	EN 61000-6-3
Approval	UL 508 / CSA 22.2
Technical data - mechanical design	
Size (flange)	ø58 mm

Technical data - mechanical design	
Shaft type	ø6 x 10 mm, solid shaft with flat
Admitted shaft load	≤40 N axial ≤80 N radial
Flange	Synchro flange
Protection EN 60529	IP 65 (without shaft seal) IP 67 (with shaft seal)
Operating speed	≤6000 rpm (+20 °C, IP 67) ≤12000 rpm (+20 °C, IP 65)
Starting torque	≤0.015 Nm (+20 °C, IP 65) ≤0.02 Nm (+20 °C, IP 67)
Material	Housing: aluminium die-cast Flange: aluminium Solid shaft: stainless steel
Operating temperature	-40...+85 °C
Relative humidity	90 % non-condensing
Resistance	EN 60068-2-6 Vibration 30 g, 10-2000 Hz EN 60068-2-27 Shock 300 g, 6 ms
Connection	Flange connector M12, 8-pin Flange connector M23, 12-pin Cable
Weight approx.	300 g

2023-01-11 The product features and technical data specified do not express or imply any warranty. Technical modifications subject to change.

EIL580-SY

Solid shaft with synchro flange

100…5000 pulses per revolution

Terminal assignment

Flange connector M23, 12-pin / cable

Pin	Core color	Assignment
1	pink	B-
2	–	–
3	blue	R+
4	red	R-
5	green	A+
6	yellow	A-
7	–	–
8	grey	B+
9	–	–
10	white	GND
11	–	–
12	brown	UB

Screen: Connected to housing

Cable data: PVC, [4x2x0.14 mm²], bending radius >32.5 mm, outer diameter approx. 6.4 mm

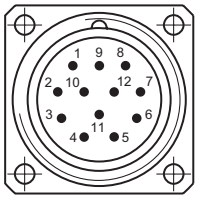

Flange connector M23,
pin contacts, 12-pin,
counterclockwise (CCW)

Flange connector M12, 8-pin

Pin	Assignment
1	GND
2	UB
3	A+
4	A-
5	B+
6	B-
7	R+
8	R-

Output signals

Clockwise rotating direction when looking at flange.

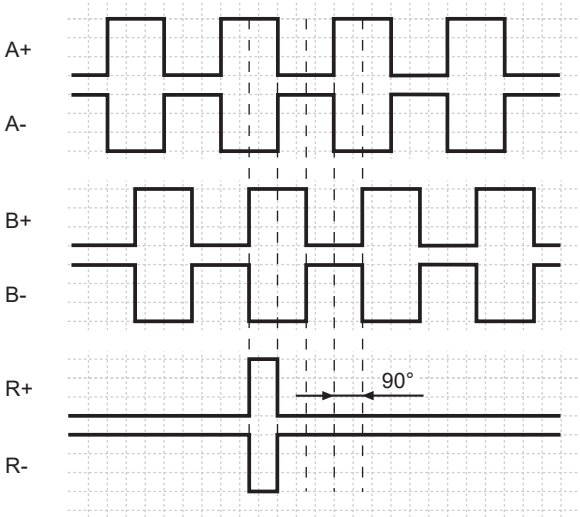

Trigger level

Outputs	**TTL/RS422**
Output level High	≥2.5 V
Output level Low	≤0.5 V
Load	≤20 mA

Outputs	**HTL/Push-pull**
Output level High	≥UB -3 V
Output level Low	≤1.5 V
Load	≤20 mA

The product features and technical data specified do not express or imply any warranty. Technical modifications subject to change.
2023-01-11

EIL580-SY

Solid shaft with synchro flange

100…5000 pulses per revolution

Dimensions

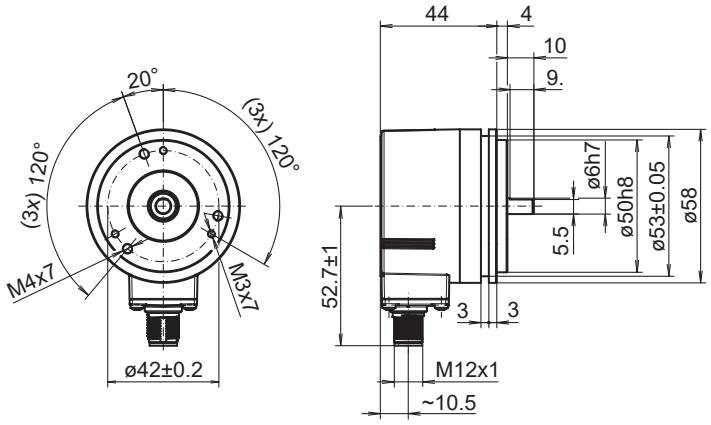

Synchro flange, flange connector M12, radial

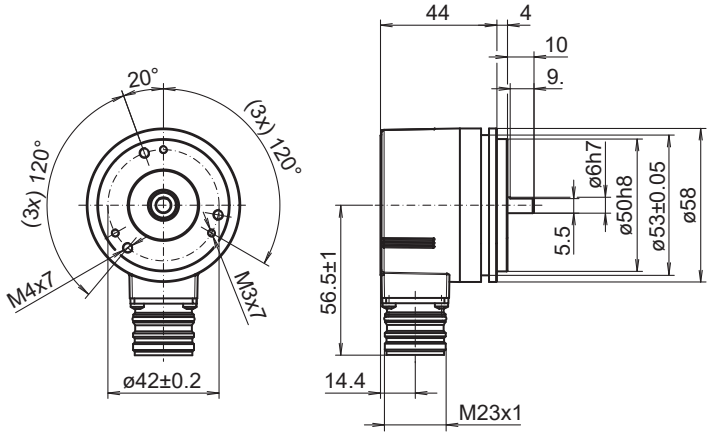

Synchro flange, flange connector M23, radial

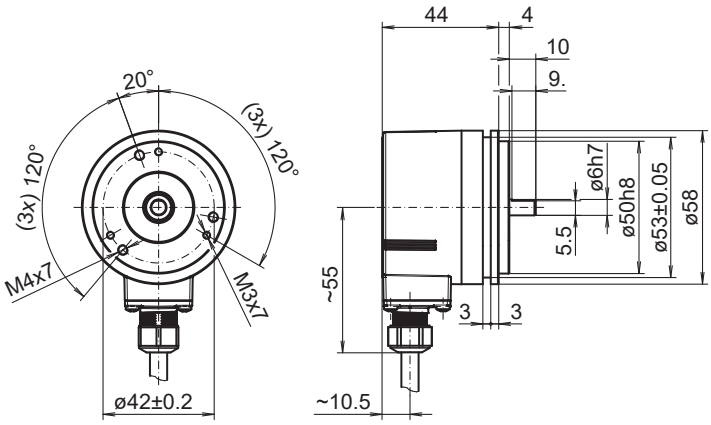

Synchro flange, cable, radial

2023-01-11 The product features and technical data specified do not express or imply any warranty. Technical modifications subject to change.

EIL580-SY

Solid shaft with synchro flange

100…5000 pulses per revolution

Dimensions

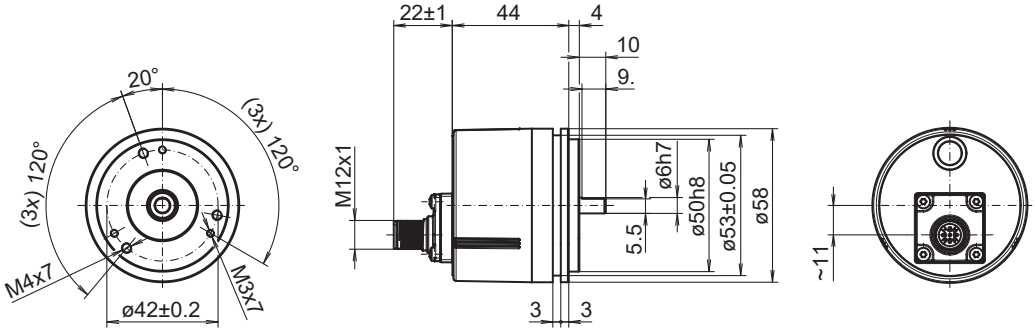

Synchro flange, flange connector M12, axial

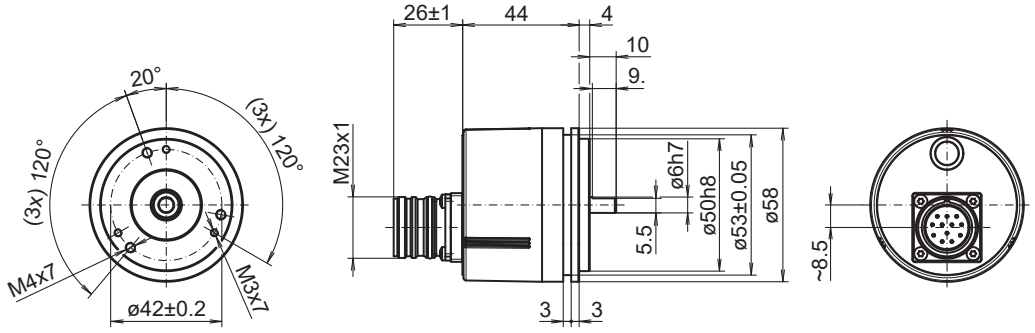

Synchro flange, flange connector M23, axial

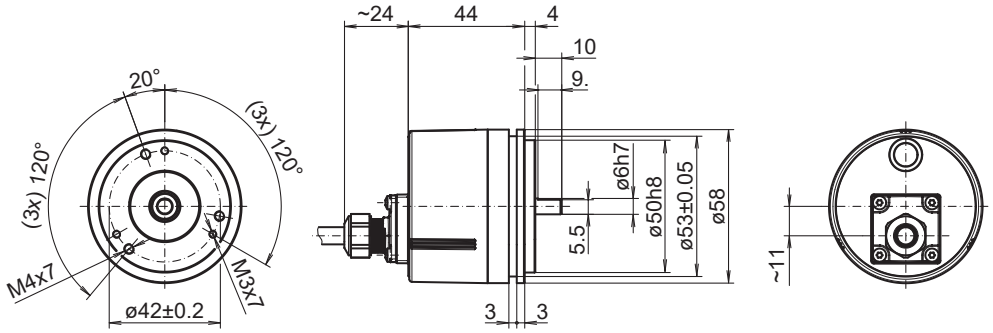

Synchro flange, cable, axial

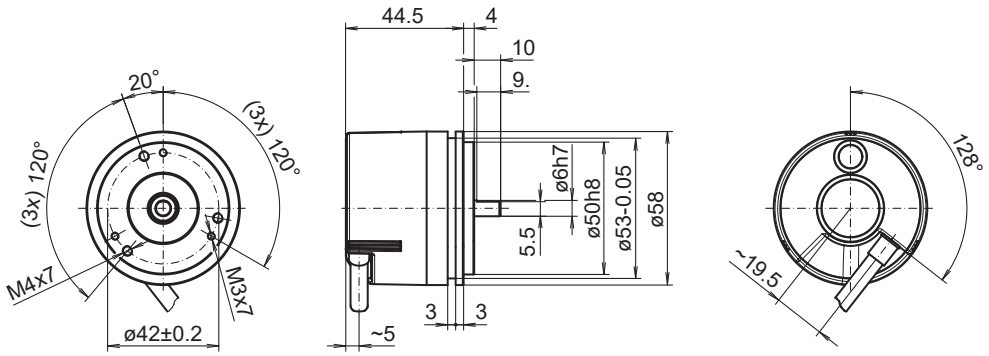

Synchro flange, cable, tangential

2023-01-11 The product features and technical data specified do not express or imply any warranty. Technical modifications subject to change.

EIL580-SY

Solid shaft with synchro flange

100…5000 pulses per revolution

Ordering reference

	EIL580	-	S	Y	##	.	#	##	#	.	####	.	A
Product													
	EIL580												
Shaft type													
Solid shaft			S										
Flange (shaft)													
Synchro flange, centering collar ø50 x 4 mm, flute ø53 mm, pitch circle diameter ø42 - 3xM3/3xM4				Y									
Shaft													
ø6 x 10 mm, with flat					06								
ø3/8 x 4/5 (Ø9.525 x 20.32 mm), with flat					U3								
Protection class													
IP 65							5						
IP 67							7						
Connection													
Cable radial, 1 m								R					
Cable radial, 2 m								L					
Flange socket radial, M23, 12-pin, male contacts, CCW								F					
Flange socket radial, M12, 8-pin, male contacts, CCW								B					
Cable axial, 1 m								T					
Cable axial, 2 m								U					
Flange socket axial, M23, 12-pin, male contacts, CCW								D					
Flange socket axial, M12, 8-pin, male contacts, CCW								A					
Cable tangential, 1 m								P					
Cable tangential, 2 m								Q					
Voltage supply / output													
5 VDC, TTL/RS422, 6 channel									E				
8...30 VDC, TTL/RS422, 6 channel (Vout=5V)									H				
8...30 VDC, HTL/push pull, 6 channel									N				
4,75...30 VDC, HTL/push pull, 6 channel (Vout=Vin)									Q				

2023-01-11 The product features and technical data specified do not express or imply any warranty. Technical modifications subject to change.

Ordering reference

	EIL580	-	S	Y	##	.	#	##	#	.	####	.	A
Pulse number													
100											100		
120											120		
150											150		
200											200		
250											250		
256											256		
300											300		
360											360		
400											400		
500											500		
512											512		
600											600		
720											720		
800											800		
900											900		
1000											1000		
1024											1024		
1200											1200		
1250											1250		
1440											1440		
1500											1500		
1800											1800		
2000											2000		
2048											2048		
2500											2500		
3000											3000		
3600											3600		
4000											4000		
4096											4096		
5000											5000		
Operating temperature													
-40...+85 °C													A

2023-01-11 The product features and technical data specified do not express or imply any warranty. Technical modifications subject to change.

Accessories	
Mounting accessories	
11065916	Coupling CPS25 (L=19, D1=06 / D2=06)
11065917	Coupling CPS25 (L=19, D1=06 / D2=08)
11065922	Coupling CPS25 (L=19, D1=10 / D2=06)
11065926	Coupling CPS25 (L=19, D1=11 / D2=06)
11065928	Coupling CPS25 (L=19, D1=12 / D2=06)
10141131	Spring washer coupling (D1=6 / D2=6)
10141132	Spring washer coupling (D1=6 / D2=10)
11034139	Spring washer coupling (D1=6 / D2=16)
11050507	Bellows coupling (D1=06 / D2=10)
10117667	Mounting adaptor
10117668	Set of eccentric fixings for mounting clamp (10117667)
11065545	Set of eccentric fixings type A
10158124	Bearing flange for encoders with synchro flange (Z 119.035)

2023-01-11 The product features and technical data specified do not express or imply any warranty. Technical modifications subject to change.